English

Instructions for Use

CuratOR™
EX3140

Color LCD Monitor

Important

Please read this “Instructions for Use”, and “Installation Manual” (separate volume) carefully to familiarize yourself with safe and effective usage.
Please retain this manual for future reference.

For monitor adjustment and settings, refer to the “Installation Manual”.

EIZO®

SAFETY SYMBOLS

This manual and this product use the safety symbols below. They denote critical information. Please read them carefully.

⚠	**WARNING** Failure to abide by the information in a WARNING may result in serious injury and can be life-threatening.	⚠	**CAUTION** Failure to abide by the information in a CAUTION may result in moderate injury and/or property or product damage.
△	Indicates a warning or caution. For example, ⚠ indicates an “electrical shock” hazard.		
⃠	Indicates a prohibited action. For example, ⃠ means “Do not disassemble”.		
○	Indicates a mandatory action. For example, ⏚ means “Ground the unit”.		

This product has been adjusted specifically for use in the region to which it was originally shipped. If operated outside this region, the product may not perform as stated in the specifications.

No part of this manual may be reproduced, stored in a retrieval system, or transmitted, in any form or by any means, electronic, mechanical, or otherwise, without the prior written permission of EIZO Corporation. EIZO Corporation is under no obligation to keep any submitted material or information confidential unless prior arrangements are made pursuant to EIZO Corporation’s receipt of said information. Although every effort has been made to ensure that this manual provides up-to-date information, please note that EIZO monitor specifications are subject to change without notice.

PRECAUTIONS

English

IMPORTANT

- This product has been adjusted specifically for use in the region to which it was originally shipped. If the product is used outside the region, it may not operate as specified in the specifications.
- To ensure personal safety and proper maintenance, please read carefully this section and the caution statements on the monitor.

Location of the Caution Statements

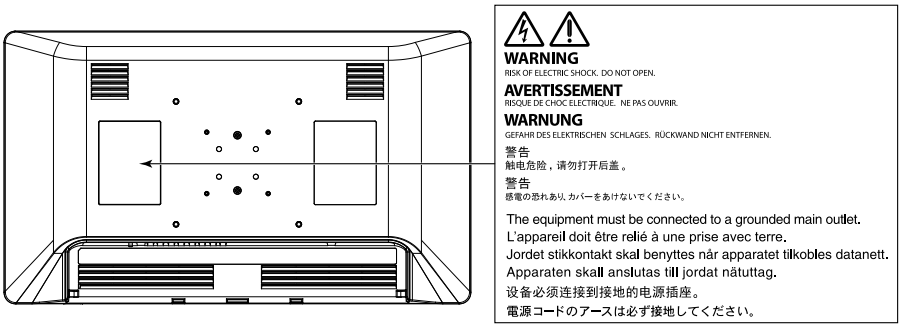

Symbols on the unit

Symbol	This symbol indicates	
○	Power Switch:	Press to turn the monitor's power off.
⊙	Power Switch:	Press to turn the monitor's power on.
⎓	Direct current	
	Alerting to electrical hazard	
	CAUTION:	Refer to "SAFETY SYMBOLS" (page 2).
	Potential equalization terminal	
	WEEE marking:	Product must be disposed of separately; materials may be recycled.
CE	CE marking:	EU conformity mark in accordance with the provisions of Council Directive and/or Regulation (EU).
	Manufacturer	
	Date of manufacture	
RXonly	Caution: Federal law (USA) restricts this device to sale by or on the order of a licensed healthcare practitioner.	
EU Medical Device	Medical device in EU	
EU Importer	Importer in EU	
UK CA	Mark signifying compliance with UK regulations	
UK Responsible Person	UK Responsible Person	
CH REP	Authorised representative in Switzerland	

WARNING

If the unit begins to emit smoke, smells like something is burning, or makes strange noises, disconnect all power connections immediately and contact your EIZO representative for advice.
Attempting to use a malfunctioning unit may result in fire, electric shock, or equipment damage.

Do not disassemble or modify the unit.
Opening the cabinet or modifying the unit may result in fire, electric shock, or burns.

Use multiple units or have ready a standby unit.
Prepare an appropriate countermeasure in case the monitor fails.

Do not turn the bushing to fix the AC adapter power cable.
Doing so may result in fire, electric shock, or equipment damage.

Refer all servicing to qualified service personnel.
Do not attempt to service this product yourself as opening or removing covers may result in fire, electric shock, or equipment damage.

Keep small objects or liquids away from the unit.
Small objects accidentally falling through the ventilation slots into the cabinet or spillage into the cabinet may result in fire, electric shock, or equipment damage. If an object or liquid falls/spills into the cabinet, unplug the unit immediately. Have the unit checked by a qualified service engineer before using it again.

Install the unit correctly on a sturdy and stable location using an arm or stand.
In accordance with the User Manual of each product, install it correctly on a sufficiently sturdy desk or wall. If the unit is installed incorrectly, it may drop or fall over, resulting in personal injury or equipment damage. If the unit falls, disconnect the power immediately and ask your local EIZO representative for advice. Do not continue using a damaged unit. Using a damaged unit may result in fire or electric shock.

Use the unit in an appropriate location.
Otherwise, fire, electric shock, or equipment damage may result.

- Do not place outdoors.
- Do not place in any form of transportation (ships, aircraft, trains, automobiles, etc.).
- Do not place in dusty or humid environments.
- Do not place in locations where water may be splashed on the screen (bathrooms, kitchens, etc.)
- Do not place in locations where smoke or steam come in direct contact with the screen.
- Do not place near heat generating devices or humidifiers.
- Do not place in locations where the product is subject to direct sunlight.
- Do not place in environments with flammable gas.
- Do not place in environments with corrosive gases (such as sulfur dioxide, hydrogen sulfide, nitrogen dioxide, chlorine, ammonia, ozone, etc.)
- Do not place in environments with dust, components that accelerate corrosion in the atmosphere (such as sodium chloride and sulfur), conductive metals, etc.

To avoid danger of suffocation, keep the plastic packing bags away from babies and children.

Use the enclosed power cord and connect to the standard power outlet in your country.
Be sure to use within the rated voltage of the power cord. Otherwise, fire or electric shock may result.
Power supply: 100-240Vac 50/60Hz

WARNING

Use the enclosed AC adapter.
The enclosed AC adapter (AHM250PS48T) is for use with this product only. Do not use the AC adapter with other equipment. Do not use an AC adapter designed for other devices with this product.
Connecting to power sources that do not match the power ratings of the AC adapter may result in fire or electric shock.

To disconnect the power cord or adapter power cable, grasp the plug firmly and pull.
Tugging on the cord or cable may damage it and result in fire or electric shock.

The equipment must be connected to a grounded main outlet.
Failure to do so may result in fire or electric shock.

Use the correct voltage.
- The unit is designed for use with a specific voltage only. Connection to another voltage than that specified in this “Instructions for Use” may cause fire, electric shock, or equipment damage.
  Power supply: 100-240Vac 50/60Hz
- Do not overload your power circuit, as this may result in fire or electric shock.

Handle the power cord and AC adapter with care.
Handle the power cord and AC adapter with care.
Do not place heavy objects on, pull or tie the power cord or the AC adapter. Using a damaged cord or AC adapter may result in fire or electric shock.

The operator should not touch the patient while touching the product.
This product has not been designed to be touched by patients.

Never touch the plug, AC adapter or power cord during a thunderstorm.
Touching them may result in electric shock.

Do not touch a damaged LCD panel directly with bare hands.
Liquid crystal is poisonous. If any part of your skin comes in direct contact with the panel, wash thoroughly. If liquid crystal enters your eyes or mouth, immediately flush with large amounts of water and seek medical attention.

⚠ CAUTION

Check the operational state before use.

- Begin use after ensuring that there are no problems with the displayed image.
- When using multiple units, begin use after ensuring that the images are displayed appropriately.

Securely fix cables / cords that have a fixing feature.

If they are not fixed securely, cables / cords may disconnect, and subsequently images may be cut off and your operations may be disrupted.

Handle with care when carrying the unit.

Disconnect the power cord and cables when moving the unit. Moving the unit with the power cord or cables attached is dangerous and may result in injury.

Carry or place the unit according to the correct specified methods.

- Monitors of size 30 inches and above are heavy. When unpacking and/or carrying the monitor, ensure at least two people are involved.

Dropping the unit may result in injury or equipment damage.

Do not block the ventilation slots on the cabinet.

- Do not place any objects on the ventilation slots.
- Do not install the unit in a place with poor ventilation or inadequate space.
- Do not use the unit laid down or upside down.

Blocking the ventilation slots prevents proper airflow and may result in fire, electric shock, or equipment damage.

Do not touch the plug or AC adapter with wet hands.

Doing so may result in electrical shock.

Use an easily accessible power outlet.

This is to facilitate disconnecting the power in case of a problem.

The AC adapter becomes hot during use.

- Do not cover or place anything on top of the AC adapter. Do not place the AC adapter on top of things that trap heat such as carpets, blankets, etc. Keep the AC adapter away from direct sunlight and heat sources. Failure to do so may result in fire.
- Before moving the monitor, be sure to turn off the power switch, disconnect the power plug from the power outlet, and wait until it has cooled completely.

Do not suspend the AC adapter in midair.

Using the adapter while it is hanging suspended may result in fire or electrical shock.

Do not place the AC adapter in a vertical orientation.

Otherwise, dust or water may enter the adapter and may result in fire or electrical shock.

Do not subject the unit and the AC adapter to any impact due to dropping them or any other causes.

Using the adapter after it has been subjected to impact may result in fire or electrical shock.

Do not subject the LCD panel to strong impact.

Otherwise, glass will break and may result in injury.

⚠ CAUTION

Periodically clean the area around the power plug and the ventilation slot of the monitor and the AC adapter.
Dust, water, or oil on the plug may result in fire.

Unplug the unit before cleaning it.
Cleaning the unit while it is plugged into a power outlet may result in electric shock.

If you plan to leave the unit unused for an extended period of time, disconnect the power plug from the wall socket after turning off the power switch for safety and power conservation.

For users in the territory of the EEA and Switzerland:
Any serious incident that has occurred in relation to the device should be reported to the Manufacturer and the Competent Authority of the Member State in which the user and/or patient is established.

About the monitor

Intended Use

This product is intended to be used to display medical images, such as endoscopic surgery images.

Attention

- This product is not intended for diagnostic purposes.
- This product should be set to horizontal view mode.
- This product may not be covered by warranty for uses other than those described in this manual.
- The specifications stipulated in this manual are only applicable when the enclosed power cord is used.
- Only use optional products manufactured or specified by us with this product.

Precautions for Use

- Parts (such as the LCD display, fan, etc.) may deteriorate from long-term usage. Periodically check that they are operating normally.
- When the screen image is changed after displaying the same image for extended periods of time, an afterimage may appear. Use the screen saver or power save function to avoid displaying the same image for extended periods of time.
- If the monitor displays continuously over a long period of time, dark smudges or burn-in may appear. To maximize the life of the monitor, we recommend the monitor be turned off periodically.
- An afterimage may appear even after a short period has elapsed depending on the displayed image. If this occurs, changing the image or leaving the power off for a few hours may solve the problem.
- The backlight of the LCD panel has a fixed lifetime. When the screen becomes dark or begins to flicker, please contact your local EIZO representative.
- The LCD panel is manufactured using high-precision technology. Although, missing pixels or lit pixels may appear on the LCD panel, this is not a malfunction. Percentage of effective dots: 99.99 % or higher.
- Do not press on the panel or edge of the frame strongly, as this may result in display malfunctions, such as interference patterns, etc. If pressure is continually applied to the panel, it may deteriorate or damage it. (If the pressure marks remain on the panel, leave the monitor with a black or white screen. The symptom may disappear.)
- Do not scratch or press on the panel with any sharp objects, as this may result in damage to the panel. Do not attempt to wipe with tissues as this may scratch the panel.
- Condensation may form on the surface or interior of this product when it is brought into a cold room, when the temperature suddenly rises, or when it is moved from a cold room to a warm room. Also, if the air conditioner is turned on after this product has been kept in a warm room or a room with high humidity for an extended period, change the facing or placement of this product so that the air from the air conditioner does not blow directly on this product. If the air from an air conditioner blows directly on to the display surface, condensation may form on the inside of the protection panel. In that case, do not turn the monitor on. Instead wait until the dew condensation disappears, otherwise it may cause some damage to the monitor.
- It takes about 30 minutes for the performance of electrical parts to stabilize. Please wait 30 minutes or more after the monitor power has been turned on or the monitor has recovered from the power saving mode, and then adjust the monitor.

Cleaning

Periodic cleaning is recommended to keep the monitor looking new and to prolong its operation lifetime. Gently wipe off any dirt on the cabinet or panel surface with a soft cloth soaked in a small amount of water or one of the chemicals listed below.

Chemicals that may be used for cleaning

Material name	Product name
Ethanol	Ethanol
Isopropyl alcohol	Isopropyl alcohol
Benzalkonium chloride	Welpas
Glutaral	Sterihyde
Glutaral	Cidex Plus28
Ammonia	Ammonia water
Hydrogen peroxide	Hydrogen peroxide solution
Alkyldiaminoethylglycine hydrochloride	Satenidin solution
Benzalkonium chloride	Zalkonin solution
Benzethonium chloride	Bezeton solution

Attention

- Do not use chemicals on a frequent basis. Chemicals such as alcohol and antiseptic solution may cause gloss variation, tarnishing, and fading of the cabinet or panel, and also quality deterioration of the image.
- Never use any thinner, benzene, wax, or abrasive cleaner, which may damage the cabinet or panel.
- Do not let chemicals come into direct contact with the monitor.

CONTENTS

PRECAUTIONS 3
IMPORTANT 3
About the monitor 8
Intended Use 8
Precautions for Use 8
Cleaning 9
CONTENTS 10
Chapter 1 Introduction 11
1-1. Features 11
1-2. Package Contents 11
1-3. Controls and Functions 12
Chapter 2 Installation / Connection 15
2-1. Before Installing the Product 15
● Installation Requirements 15
2-2. Installing the Product 16
2-3. Connecting the Power Cord 17
2-4. Connecting the Cables 18
2-5. Installing the Cable Cover 19
2-6. Turning On the Power 19
Chapter 3 If No Image Is Displayed 20
Chapter 4 Specifications 21
4-1. Specifications List 21
4-2. Displayable Input Signals 23
4-3. Optional Accessories 23
Appendix 24
Medical Standard 24
EMC Information 25
Warning for Radio interference 29
Declaration of compliance with India RoHS 30

Chapter 1 Introduction

1-1. Features

High-quality and high-resolution Ultra High Definition (UHD)

- The UHD LCD display allows for display of high-quality, high-resolution medical images.
- Equipped with front protection panel
- LED Backlight

Supports multiple I/O

- 3G-SDI: 4 inputs / 4 outputs (UHD compatible display can be output to four terminals via 3G-SDI.*1)
- DVI signal: 2 inputs / 1 output
- DisplayPort: 1 input (DisplayPort 1.2 SST UHD compatible.*2)

Other functions

- S.R.S.C. (Smart Resolution with Sparse Coding) function
  Reduces blur on input images, allowing for a crisp, clear display.
- 2 screen display function
  Permits parallel display of two input images.
- Gamma switch function
  Gamma function is installed according to usage.
  Simplified DICOM® image is supported.
- Color temperature switch function
  Color temperature switch function is installed according to usage.
- External remote function
  Allows for remote control via USB, RS-232C or GPI terminal.
- Direct input signal switching can be assigned to a function button.
- IP32 protection structure (Excluding the AC adapter)
  The IPx2 protection level is effective when the monitor is installed so it cannot be put at a slant.

*1 Either Square Division (SQD) or Two-Sample Interleave Division (2SI).
*2 SST: Single Stream Transport

1-2. Package Contents

Check that all of the following items are included in the package.

Note

- It is recommended that the box and packing materials be stored so that they can be used to move or transport this product.

- Monitor
- Power cord
- AC adapter (AHM250PS48T)
- Cable cover (with screws)
- Monitor attachment screw
  - (M4×12) x 4
  - (M6×15) x 4
- User Manual CD
- Instructions for Use

1-3. Controls and Functions

AC adapter

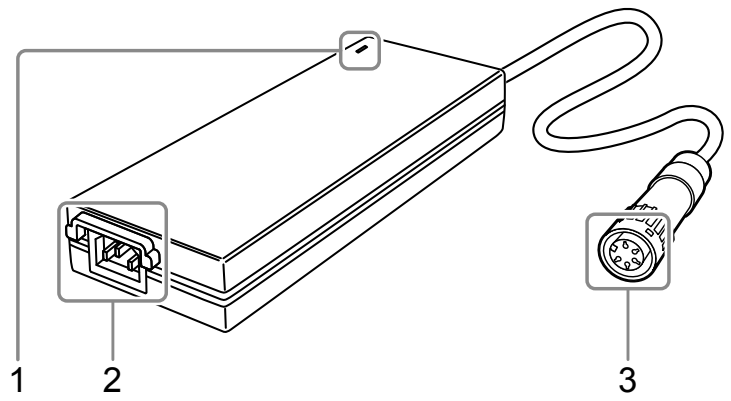

1. Main power indicator	Depending on the operation status of the main power supply, the indicator of the AC adapter turns on or off. Lit up: Power on, Not lit up: Power off
2. AC IN terminal	Connects the power cord.
3. DC OUT terminal	Connect to the DC IN terminal on the monitor.

Front

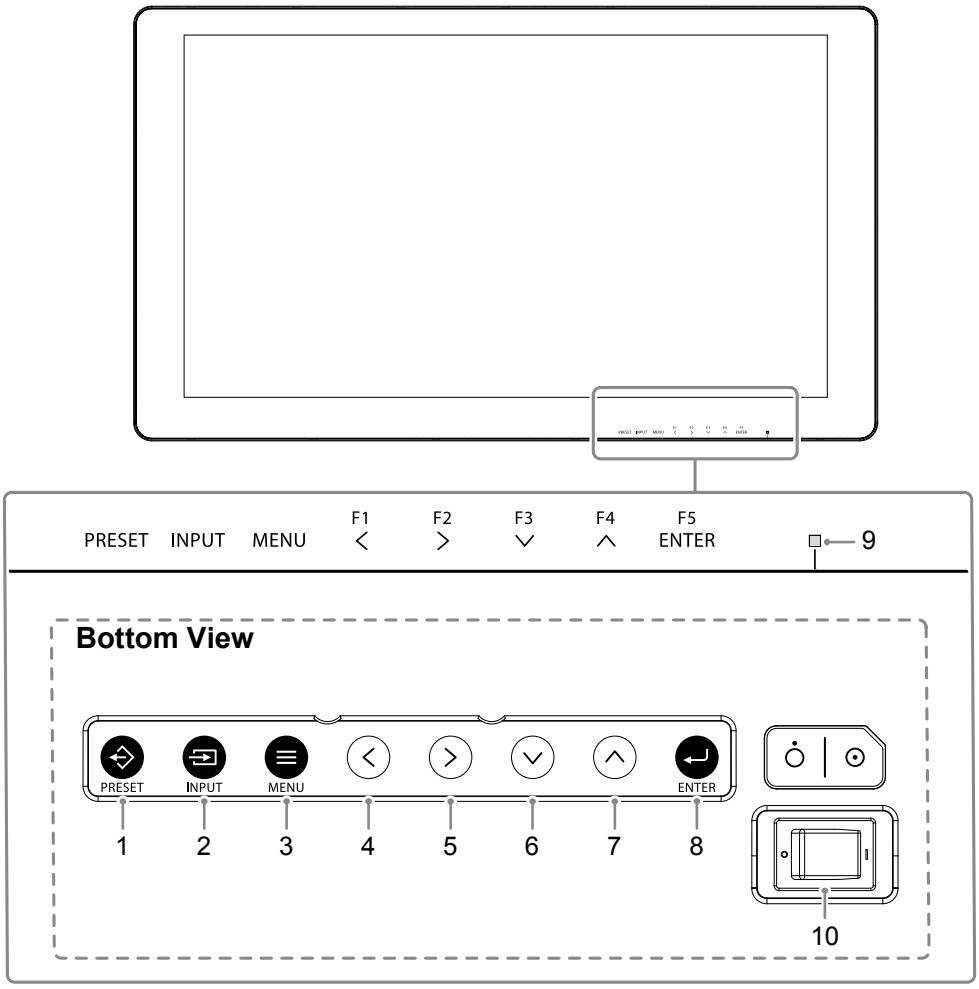

1. (PRESET) button	Displays the preset menu.
2. (INPUT) button	Displays the input select menu.
3. (MENU) button	Displays the main menu.
4. (F1) button	Executes the function assigned to this button. Select items in the menu screen.
5. (F2) button	
6. (F3) button	
7. (F4) button	
8. (F5, ENTER) button	Executes the function assigned to this button. Select items in the menu screen.
9. Power indicator	The indicator color differs depending on the monitor's operation status. Green: Monitor in operation, Orange: Power saving mode, Off: Power off
10. Power switch	Turns the power on or off. ⊙ : On, ○ : Off

Rear

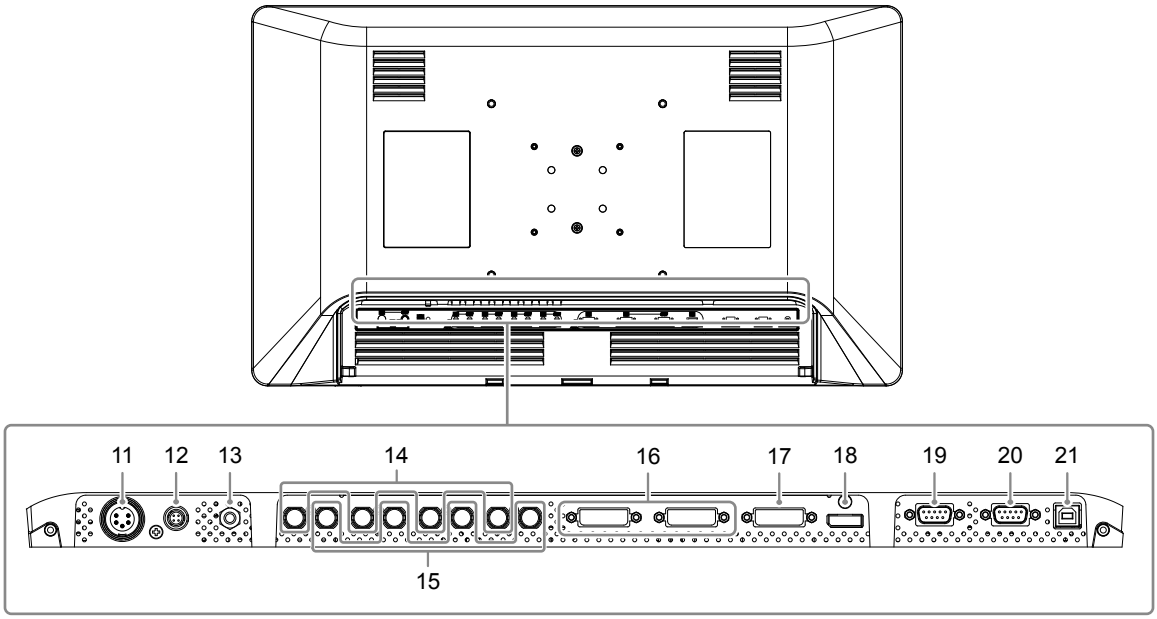

11. DC IN terminal	Connects the DC OUT terminal of the AC adapter.
12. DC OUT terminal	Used when providing 5V power to a peripheral device. **Attention** • Do not connect this to the terminal to measurement devices or medical equipment which will come into contact with a patient.
13. (Equipotential) terminal	This terminal is used to equalize potential voltage between equipment. Connect using an equipotential plug.
14. SDI 1/2/3/4 input terminals (BNC type)	Connect from devices with an SDI output terminal.
15. SDI 1/2/3/4 output terminals (BNC type)	The signal into the SDI input terminal is output as is.
16. DVI-D 1/2 input terminals (DVI-D)	Connect from devices with DVI-D output.
17. DVI-D 2 output terminal (DVI-D)	The signal into the DVI-D 2 input terminal is output as is.
18. DisplayPort input terminal (DisplayPort)	Connect from devices with DisplayPort output.
19. GPI input terminal (D-Sub 9pin)	Connects to GPI-supported external devices. By assigning functions to each terminal, this product can be controlled by external devices.
20. RS-232C terminal (D-Sub 9pin)	Controls this product by connecting it to an external device. Input switching and various adjustments are possible from connected external devices.
21. USB terminal (USB upstream port, Type-B)	This product can be controlled by connecting an external device. The connected external device can change inputs and make other adjustments.

Chapter 2 Installation / Connection

2-1. Before Installing the Product

Carefully read “PRECAUTIONS” (page 3) and always follow the instructions.
When installing this product, perform thorough operational testing (of the system, cables, arms, etc.) in the environment where the product will be used.

● Installation Requirements

When installing the monitor, ensure that there is adequate space around the sides, back, top, and bottom of the monitor.

Attention

- Position the monitor so that there is no light to interfere with the screen.
- Do not use any materials or objects that will cover the monitor or the AC adapter.

2-2. Installing the Product

This product should be installed using an arm or stand.

Attention

- When installing, do so by carefully following the information in the User Manual about the arm or stand.
- Ensure the following and select components that comply with the VESA standards.
  - Clearance between the screw holes: 100 mm × 100 mm, 200 mm × 200 mm
  - Strong enough to support weight of the monitor unit (excluding the stand) and attachments such as cables.
- Use the supplied screws (M4 screws for 100 mm x 100 mm, M6 screws for 200 mm x 200 mm) when installing.
- When using an arm or stand, attach it to achieve the following tilt angles of the monitor.
  - Up 45˚, down 45˚
- Connect the cables after attaching an arm or stand.
- The monitor, arm, and stand are heavy. Dropping them may result in injury or equipment damage.
- Periodically check the tightness of the screws. If not sufficiently tight, the monitor may detach from the arm, which may result in injury or equipment damage.

1. Attach the arm or stand to the back of the monitor by aligning the four screw holes and secure the arm or stand using the screws supplied with the monitor.

Screw tightening torque: 1.0 N·m to 1.4 N·m (M4 screws), 1.5 N·m to 2.0 N·m (M6 screws)

Required tools: Phillips screwdriver (No. 2)

Rear

Unit: mm

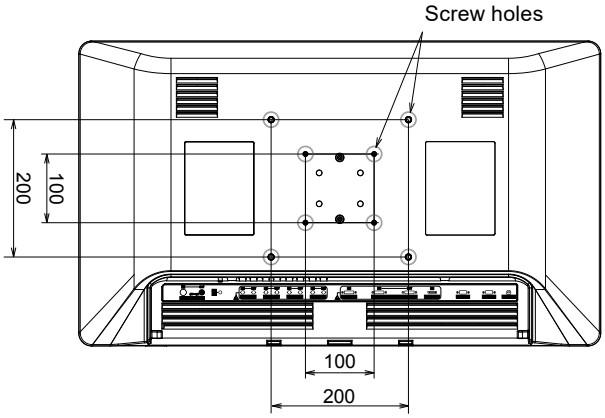

Using the supplied screws

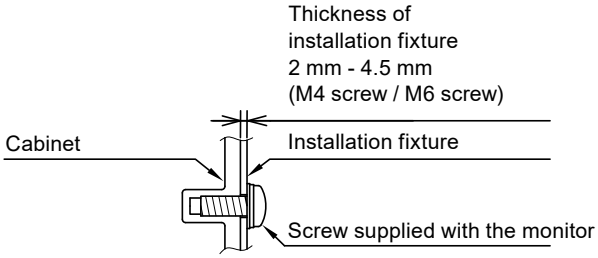

Using commercially available screws

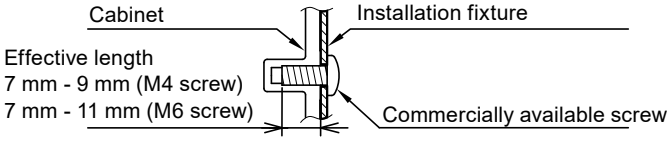

2-3. Connecting the Power Cord

Attention

- Turn off the monitor before connecting it.
- When removing the power cord, always remove the power plug from the power outlet first.

1. Connect the power cord to the AC IN terminal on the AC adapter.

Insert the power cord all the way to the back.

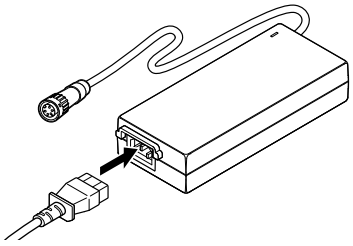

2. Connect the DC OUT terminal of the AC adapter to the DC IN terminal on the monitor.

Align the connector shape with the port shape, rotate the lock ring clockwise, and fix it securely.

Note

- If the lock ring is stiff and does not rotate, push it further into the monitor and try again to rotate it.

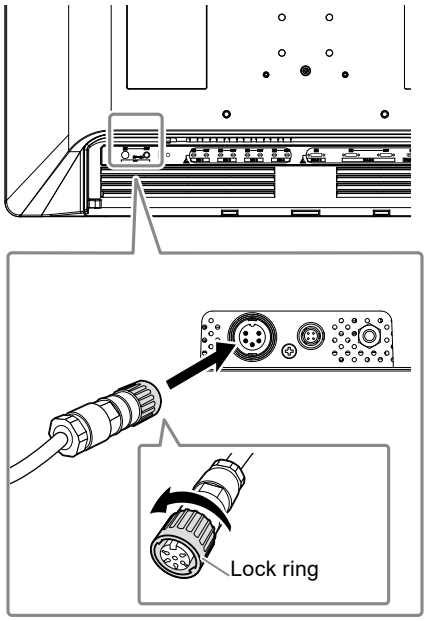

3. Check the rated value on the AC adapter and connect the power plug to the power outlet.

Attention

- If the AC adapter is installed vertically, make sure the AC inlet is not at the top.

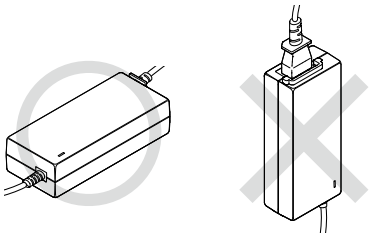

OK: Horizontal position NG: Vertical position

- Secure the adapter using a banding band such as a cable tie as necessary to prevent it from dropping.

2-4. Connecting the Cables

1. Connect the cables appropriate for the device to be used.

Attention

- Do not use damaged cables.
- Do not connect or disconnect the signal cable while the monitor is turned on.
- The SDI terminal, DVI-D terminal and DisplayPort terminal are vulnerable to static electricity, therefore exercise caution when installing. When working with the monitor, be sure to observe the following:
  - Do not touch the connector pins.
  - Do not touch pins at the end of any cable connected to a connector.
  - Take anti-static precautions such as using an anti-static wrist strap when working.

Note

- The warning label on the right is displayed near the DisplayPort terminal, SDI terminal and DVI-D terminal on this product.

2-5. Installing the Cable Cover

1. Align the cable cover on the back of the monitor in such a way that the cables can go through the cable outlet port.

2. Insert the cable cover tabs into the grooves in the monitor.

3. Tighten the screws at the left and right-hand holes on the bottom side of the monitor.

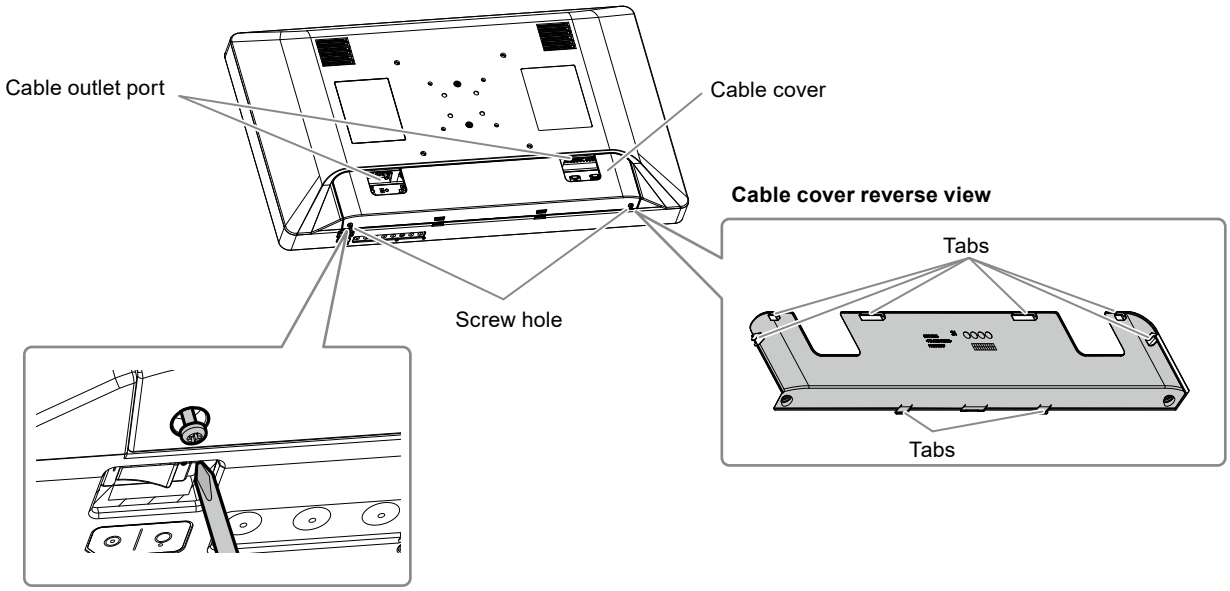

Attention

- Ensure that cables are not pinched between the cable cover and the monitor.
- Securely tighten the screws in the two locations. (Screw tightening torque: 0.4 N·m to 0.7 N·m, Required tools: Phillips screwdriver (No. 2))
- Avoid subjecting the terminal and cable to stress.
- Do not pack or transport with the cable cover attached.

2-6. Turning On the Power

1. Turn on the power switch on the bottom of the monitor, and then turn on the monitor.

The power indicator on the front of the monitor lights up green.

If the indicator does not light up, see “Chapter 3 If No Image Is Displayed” (page 20).

Note

- If the power switch on the bottom of the monitor is turned off, the monitor is turned off.

Chapter 3 If No Image Is Displayed

Problem	Possible cause and remedy
1. No picture	• Check whether the power cord is connected properly. • Check whether the DC OUT terminal and DC IN terminal are connected properly. • Turn on the power switch. • Check whether the main power indicator of the AC adapter is on. • Turn off the power, and then turn it on again.
2. The message below appears.	This message appears when the signal is not input correctly even though the monitor is functioning properly.
• This message appears when no signal is input. Example: SDI 1 No Signal	• The message shown on the left may appear, because some devices to be connected do not output the signal immediately after power-on. • Check whether the device to be connected is turned on. • Check whether the signal cable is connected properly. • Turn off the power, and then turn it on again.
• The message indicates that the input signal is outside the specified frequency range. Example: DisplayPort Not Supported	• Check whether the device to be connected is configured to meet the resolution and vertical scan frequency requirements of the monitor. “4-2. Displayable Input Signals” (page 23) • Reboot the device to be connected.

Chapter 4 Specifications

4-1. Specifications List

Monitor

LCD Panel		
Type	Color (IPS)	
Backlight	LED	
Size	78.9 cm (31.1 inch)	
Display resolution (H x V)	3840 × 2160	
Display Size (H x V)	654 mm × 368 mm	
Pixel Pitch	0.170 mm	
Display Colors	8-bit: 16.77 million colors 10-bit (SDI / DisplayPort): 1073.74 million colors (Max.)	
Viewing Angles (H / V, typical)	178˚ / 178˚	
Brightness (typical)	350 cd/m^2	
Response Time (typical)	20 ms (black -> white -> black)	
Contrast Ratio (typical)	1500 : 1	
Video Signals		
Input Terminals	SDI (BNC) × 4	3G / HD-SDI
	DVI (DVI-D) × 2	Single link, HDCP support
	DisplayPort × 1	HDCP support
Output Terminal	SDI (BNC) × 4	3G / HD-SDI
	DVI (DVI-D) × 1	Single link, DVI-D (HDCP unsupported)
Monitor Control		
Monitor Control Terminal	USB (USB upstream port, Type-B)	
	RS-232C (D-Sub 9 pin) x 1	
	GPI (D-Sub 9 pin) x 1	
Power		
Input	DC 48 V ± 10%, 2.9 A	
Maximum Power Consumption	Max. 139.2 W	
DC OUT terminal	5 V, 2 A	

Physical Specifications	
External dimensions (W × H × D)	760 mm × 444 mm × 87 mm
Net Weight	Approx. 11.2 kg
Protection structure	IP32 (The IPx2 protection level is effective when the monitor is installed so it cannot be put at a slant.)
Operating Environmental Requirements	
Temperature	0 ˚C to 35 ˚C (32 ˚F to 95 ˚F)
Humidity	20% to 85% R.H. (no condensation)
Air Pressure	540 hPa - 1060 hPa
Transportation / Storage Environmental Requirements	
Temperature	-20 ˚C to 60 ˚C (-4 ˚F to 140 ˚F)
Humidity	10% to 90% R.H. (no condensation)
Air Pressure	540 hPa to 1060 hPa

AC adapter

Power	
Input	100 - 240 VAC ± 10%, 50 / 60 Hz, 3.0 A
Maximum Power Consumption	Max. 146 W
Physical Specifications	
External dimensions (W × H × D)	223.0 mm × 37.0 mm × 88.5 mm
Net Weight	Approx. 1.1 kg
Operating Environmental Requirements	
Temperature	0 ˚C to 35 ˚C (32 ˚F to 95 ˚F)
Humidity	20% to 85% R.H. (no condensation)
Air Pressure	540 hPa - 1060 hPa
Transportation / Storage Environmental Requirements	
Temperature	-20 ˚C to 60 ˚C (-4 ˚F to 140 ˚F)
Humidity	10% to 90% R.H. (no condensation)
Air Pressure	540 hPa to 1060 hPa

4-2. Displayable Input Signals

√: Supported

Signal name	Horizontal Frequency (kHz)	Vertical Frequency (Hz)	SDI 1 SDI 2 SDI 3 SDI 4	DVI 1 DVI 2	DisplayPort
720 x 480@59p	31.469	59.940	-	√*1	-
720 x 480@60p	31.500	60.000	-	√*1	-
720 x 576@50p	31.250	50.000	-	√*1	-
1280 x 720@50p	37.500	50.000	√	√	-
1280 x 720@59p	44.955	59.940	√	√	-
1280 x 720@60p	45.000	60.000	√	√	-
1920 x 1080@50i	28.125	50.000	√	√	-
1920 x 1080@59i	33.750	59.940	√	√	-
1920 x 1080@60i	33.750	60.000	√	√	-
1920 x 1080@23p	26.973	23.976	√	√	-
1920 x 1080@24p	27.000	24.000	√	√	-
1920 x 1080@25p	28.125	25.000	√	√	-
1920 x 1080@29p	33.716	29.970	√	√	-
1920 x 1080@30p	33.750	30.000	√	√	-
1920 x 1080@50p	56.250	50.000	√*2	√	√
1920 x 1080@59p	67.433	59.940	√*2	√	√
1920 x 1080@60p	67.500	60.000	√*2	√	√
640 x 480@60	31.469	59.940	-	√	√
800 x 600@60	37.879	60.317	-	√	√
1024 x 768@60	48.363	60.004	-	√	√
1280 x 800@60	49.702	59.810	-	√	√
1280 x 960@60	60.000	60.000	-	√	√
1280 x 1024@60	63.981	60.020	-	√	√
1600 x 1200@60	75.000	60.000	-	√	√
1920 x 1200@60	74.038	59.950	-	√	√
3840 x 2160@23	53.946	23.976	√*3	-	-
3840 x 2160@24	54.000	24.000	√*3	-	-
3840 x 2160@25	56.250	25.000	√*3	-	-
3840 x 2160@29	67.433	29.970	√*3	-	-
3840 x 2160@30	67.500	30.000	√*3	-	-
3840 x 2160@50	112.500	50.000	√*4	-	√*5
3840 x 2160@59	134.865	59.940	√*4	-	√*5
3840 × 2160@60	135.000	60.000	√*4	-	√*5

*1 Not compatible with 16:9 aspect ratio displays.
*2 3G-SDI input is only compatible with Level-A.
*3 This is a Square Division (SQD) signal. HD-SDI signal is input using all four terminals simultaneously. The resolution, horizontal scanning frequency and vertical scanning frequency timing must match for each terminal.
*4 This is either Square Division (SQD) or Two-Sample Interleave Division (2SI). 3G-SDI (Level-A only) signal is input using all four terminals simultaneously. The resolution, horizontal scanning frequency and vertical scanning frequency timing must match for each terminal.
*5 10 bit display is only possible using YCbCr422.

4-3. Optional Accessories

The following accessories are available separately.

Stand	HST03

Appendix

Medical Standard

- It is necessary to ensure that the final system is in compliance with IEC60601-1-1 requirements.
- Power-supplied equipment can emit electromagnetic waves, that could influence, limit or result in malfunction of the monitor. Install the equipment in a controlled environment, in which such effects are avoided.

Classification of Equipment

- Electric shock protection type: Class I
- EMC class: EN60601-1-2:2015 Group 1 Class A
- Medical device classification (EU): Class I
- Mode of operation: Continuous
- IP class: IP32 (The IPx2 protection level is effective when the monitor is installed so it cannot be put at a slant.)

EMC Information

The performance of the EX3140 ensures appropriate display of images.

Intended Use Environments

The EX3140 is intended to be used in professional healthcare facility environments such as clinics and hospitals (including use in the vicinity of high-frequency surgical equipment such as electrosurgical knives).

The following environments are not suitable for using the EX3140.

- Home healthcare environments
- In the vicinity of short-wave therapy equipment
- RF shielded room of MRI medical equipment systems
- In shielded special environments
- Installed in vehicles including ambulances
- Other special environments

⚠ WARNING

The EX3140 requires special precautions regarding EMC and during installation. You need to carefully read the EMC Information and the "PRECAUTIONS" section of this document, and observe the following instructions when installing and operating the product.

The EX3140 should not be used adjacent to or stacked with other equipment. If adjacent or stacked use is necessary, the equipment or system should be observed to check for normal operation in the configuration in which it will be used.

When using portable RF communication equipment, keep it 30 cm (12 inches) or more away from any part, including cables, of the EX3140. Otherwise, degradation of the performance of this equipment could result.

Anyone who connects additional equipment to the signal input parts or signal output parts when configuring a medical system is responsible for ensuring that the system complies with the requirements of IEC/EN60601-1-2.

Images may be distorted if the product is used near a device such as high-frequency surgical equipment. Check in advance to ensure that no problems occur during use.

Be sure to use cables that satisfy the following requirements.
Use of cables that do not satisfy the requirements could result in increased electromagnetic emissions, reduced electromagnetic immunity of this equipment, and incorrect operation.

Cables	Max. Cable Length	Shielding
AC Cord	2 m	Unshielded
DC Cord	17.5 m	Shielded
BNC Cable (SDI)	30 m	Shielded
DVI Cable	5 m	Shielded
DisplayPort Cable	5 m	Shielded
RS-232C Cable	5 m	Shielded
USB Cable	5 m	Shielded

Technical Specifications

Electromagnetic emissions		
The EX3140 is intended for use in the electromagnetic environment specified below. The customer or the user of the EX3140 should assure that it is used in such an environment.		
Emission test	**Compliance**	**Electromagnetic environment - Guidance**
RF emissions CISPR11 / EN55011	Group 1	The EX3140 uses RF energy only for its internal function. Therefore, its RF emissions are very low and not likely to cause any interference in nearby electronic equipment.
RF emissions CISPR11 / EN55011	Class A	The EMISSIONS characteristics of the EX3140 make it suitable for use in industrial areas and hospitals (CISPR11 class A). If it is used in a residential environment (for which CISPR11 class B is normally required) the EX3140 might not offer adequate protection to radio-frequency communication services. The user might need to take mitigation measures, such as relocating or re-orienting the equipment.
Harmonic emissions IEC / EN61000-3-2	Class D	
Voltage fluctuations / flicker emissions IEC / EN61000-3-3	Complies	

Electromagnetic immunity			
The EX3140 has been tested at the following compliance levels according to the testing requirements for professional healthcare facility environments defined in IEC / EN60601-1-2. Customers and users of the EX3140 must ensure that the EX3140 is used in the following environments:			
Immunity test	**Test level for professional healthcare facility environments**	**Compliance level**	**Electromagnetic environment - Guidance**
Electrostatic discharge (ESD) IEC / EN61000-4-2	±8 kV contact discharge ±15 kV air discharge	±8 kV contact discharge ±15 kV air discharge	Floors should be wood, concrete or ceramic tile. If floors are covered with synthetic material, the relative humidity should be at least 30%.
Electrical fast transients / bursts IEC / EN61000-4-4	±2 kV power lines ±1 kV input / output lines	±2 kV power lines ±1 kV input / output lines	Mains power quality should be that of a typical commercial or hospital environment.
Surges IEC / EN61000-4-5	±1 kV line to line ±2 kV line to ground	±1 kV line to line ±2 kV line to ground	Mains power quality should be that of a typical commercial or hospital environment.
Voltage dips, short interruptions and voltage variations on power supply input lines IEC / EN61000-4-11	0 % U_T (100 % dip in U_T) 0.5 cycles and 1 cycle 70 % U_T (30 % dip in U_T) 25 cycles 0 % U_T (100 % dip in U_T) 5 sec	0 % U_T (100 % dip in U_T) 0.5 cycles and 1 cycle 70 % U_T (30 % dip in U_T) 25 cycles 0 % U_T (100 % dip in U_T) 5 sec	Mains power quality should be that of a typical commercial or hospital environment. If the user of the EX3140 requires continued operation during power mains interruptions, it is recommended that the EX3140 be powered from an uninterruptible power supply or a battery.
Power frequency magnetic fields IEC / EN61000-4-8	30 A/m (50 / 60 Hz)	30 A/m	Power frequency magnetic fields should be at levels characteristic of a typical location in a typical commercial or hospital environment. The product should be kept at least 15 cm away from the source of power frequency magnetic fields during use.

Electromagnetic immunity			
The EX3140 has been tested at the following compliance levels according to the testing requirements for professional healthcare facility environments defined in IEC / EN60601-1-2. Customers and users of the EX3140 must ensure that the EX3140 is used in the following environments:			
Immunity test	**Test level for professional healthcare facility environments**	**Compliance level**	**Electromagnetic environment - Guidance**
			Portable and mobile RF communications equipment should be used no closer to any part of the EX3140, including cables, than the recommended separation distance calculated from the equation applicable to the frequency of the transmitter. Recommended separation distance
Conducted disturbances induced by RF fields IEC / EN61000-4-6	3 Vrms 150 kHz - 80 MHz	3 Vrms	$d = 1.2\sqrt{P}$
	6 Vrms ISM bands between 150 kHz and 80 MHz	6 Vrms	
Radiated RF fields IEC / EN61000-4-3	3 V/m 80 MHz - 2.7 GHz	3 V/m	$d = 1.2\sqrt{P}$, 80 MHz - 800 MHz $d = 2.3\sqrt{P}$, 800 MHz - 2.7 GHz Where “P” is the maximum output power rating of the transmitter in watts (W) according to the transmitter manufacturer and “d” is the recommended separation distance in meters (m). Field strengths from fixed RF transmitters, as determined by an electromagnetic site survey [a)], should be less than the compliance level in each frequency range [b)]. Interference may occur in the vicinity of equipment marked with the following symbol.

Note 1	U_T is the a.c. mains voltage prior to application of the test level.
Note 2	At 80 MHz and 800 MHz, the higher frequency range applies.
Note 3	Guidelines regarding conducted disturbances induced by RF fields or radiated RF fields may not apply in all situations. Electromagnetic propagation is affected by absorption and reflection from structures, objects and people.
Note 4	The ISM bands between 150 kHz and 80 MHz are 6.765 MHz to 6.795 MHz, 13.553 MHz to 13.567 MHz, 26.957 MHz to 27.283 MHz, and 40.66 MHz to 40.70 MHz.
a)	Field strengths from fixed transmitters, such as base stations for radio (cellular/cordless) telephones and land mobile radios, amateur radio, AM and FM radio broadcast and TV broadcast cannot be predicted theoretically with accuracy. To assess the electromagnetic environment due to fixed RF transmitters, an electromagnetic site survey should be considered. If the measured field strength in the location in which the EX3140 is used exceeds the applicable RF compliance level above, the EX3140 should be observed to verify normal operation. If abnormal performance is observed, additional measures may be necessary, such as reorienting or relocating the EX3140.
b)	Over the frequency range 150 kHz to 80 MHz, field strengths should be less than 3 V/m.

Recommended separation distances between portable or mobile RF communication equipment and the EX3140

The EX3140 is intended for use in an electromagnetic environment in which radiated RF disturbances are controlled. The customer or the user of the EX3140 can help prevent electromagnetic interference by maintaining a minimum distance between portable and mobile RF communications equipment (transmitters) and the EX3140.
Immunity to proximity fields from the following RF wireless communication equipment has been confirmed:

Test frequency (MHz)	Bandwidth a) (MHz)	Service a)	Modulation b)	Maximum power (W)	Minimum separation distance (m)	IEC / EN60601 test level (V/m)	Compliance level (V/m)
385	380 - 390	TETRA 400	Pulse modulation b) 18 Hz	1.8	0.3	27	27
450	430 - 470	GMRS 460, FRS 460	FM ±5 kHz deviation 1 kHz sine	2	0.3	28	28
710 745 780	704 - 787	LTE Band 13, 17	Pulse modulation b) 217 Hz	0.2	0.3	9	9
810 870 930	800 - 960	GSM 800 / 900, TETRA 800, iDEN 820 CDMA 850, LTE Band 5	Pulse modulation b) 18 Hz	2	0.3	28	28
1720 1845 1970	1700 - 1990	GSM 1800; CDMA 1900; GSM 1900; DECT; LTE Band 1, 3, 4, 25; UMTS	Pulse modulation b) 217 Hz	2	0.3	28	28
2450	2400 - 2570	Bluetooth, WLAN, 802.11 b/g/n, RFID 2450, LTE Band 7	Pulse modulation b) 217 Hz	2	0.3	28	28
5240 5500 5785	5100 - 5800	WLAN 802.11 a/n	Pulse modulation b) 217 Hz	0.2	0.3	9	9

a) For some services, only the uplink frequencies are included.

b) Carrier waves are modulated using a 50 % duty cycle square wave signal.

The EX3140 is intended for use in an electromagnetic environment in which radiated RF disturbances are controlled. For other portable and mobile RF communication equipment (transmitters), the minimum distance between portable and mobile RF communications equipment (transmitters) and the EX3140 should be as recommended below, according to the maximum output power of the communications equipment.

Rated maximum output power of transmitter (W)	Separation distance according to frequency of transmitter (m)		
	150 kHz to 80 MHz $d = 1.2\sqrt{P}$	80 MHz to 800 MHz $d = 1.2\sqrt{P}$	800 MHz to 2.7 GHz $d = 2.3\sqrt{P}$
0.01	0.12	0.12	0.23
0.1	0.38	0.38	0.73
1	1.2	1.2	2.3
10	3.8	3.8	7.3
100	12	12	23

For transmitters rated at a maximum output power not listed above, the recommended separation distance “d” in meters (m) can be estimated using the equation applicable to the frequency of the transmitter, where “P” is the maximum output power rating of the transmitter in watts (W) according to the transmitter manufacturer.

Note 1 At 80 MHz and 800 MHz, the separation distance for a higher frequency range applies.

Note 2 These guidelines may not apply in all situations. Electromagnetic propagation is affected by absorption and reflection from structures, objects and people.

Warning for Radio interference

For U.S.A, Canada Only

WARNING!

This equipment has been tested and found to comply with the limits for a Class A digital device, pursuant to Part 15 of the FCC Rules. These limits are designed to provide reasonable protection against harmful interference when the equipment is operated in a commercial environment. This equipment generates, uses, and can radiate radio frequency energy and if not installed and used in accordance with the instruction manual, may cause harmful interference to radio communications. Operation of this equipment in a residential area is likely to cause harmful interference in which case the user will required to correct the interference at his own expense.
Changes or modifications not expressly approved by the party responsible for compliance could void the user's authority to operate the equipment.

Note

Use the specified cable below so as to keep interference within the limits of a Class A digital device.

- AC Cord
- Shielded Signal Cable

Canadian Notice

This Class A information technology equipment complies with Canadian ICES-003.
Cet équipement informatique de classe A est conforme à la norme NMB-003 du Canada.

For Australia, New Zealand, etc Only

Warning

Operation of this equipment in a residential environment could cause radio interference.

Warnung

Der Betrieb dieses Geräts in einer Wohnumgebung konnte Funkstörungen verursachen.

Avertissement

L'utilisation de cet équipement dans une zone résidentielle pourrait provoquer des interférences radio.

Declaration of compliance with India RoHS

We, EIZO Corporation, hereby declare and guarantee that this product has been designed and manufactured in compliance with the E-Waste management rule 2016 which prohibit the inclusion of the following substances except for the exemptions listed in schedule II.

- Lead, Mercury, Hexavalent Chromium, Polybrominated Biphenyls or Polybrominated Diphenyl Ethers exceeding a concentration of 0.1% by weight in homogeneous materials
- Cadmium exceeding a concentration of 0.01% by weight in homogeneous materials

For information on proper disposal and recycling of the product, please refer to the following website.
eizo.co.in/e-waste.php

EIZO Corporation
153 Shimokashiwano, Hakusan, Ishikawa 924-8566 Japan

EIZO GmbH EC REP
Carl-Benz-Straße 3, 76761 Rülzheim, Germany

艺卓显像技术(苏州)有限公司
中国苏州市苏州工业园区展业路 8 号中新科技工业坊 5B

EIZO Limited UK Responsible Person
1 Queens Square, Ascot Business Park, Lyndhurst Road,
Ascot, Berkshire, SL5 9FE, UK

EIZO AG CH REP
Moosacherstrasse 6, Au, CH-8820 Wädenswil, Switzerland

www.eizoglobal.com

00N0N059F1
IFU-EX3140-6

Copyright © 2018 - 2022 EIZO Corporation. All rights reserved.

6th Edition - April 7th, 2022 Printed in Japan.